AL-32T,32T-N

Full bore type | **Lift type** | Safety valve | Relief valve
Safety relief valve | Lever type | **Closed type** | Dash-pot structure
Handle type | **Stainless** | High-pressure gas testing product
Diaphragm | **Non-leakage**

Soft seat type

JWWA

JWWA approval (AL-32T-N)

AL-32T

■Features

1. All stainless steel (trim parts: SCS14A and SUS316) offering high corrosion resistance.
2. Excellent air tightness ensured by the valve seat incorporating soft seat. Most suitable for application where valve seat leakage is not tolerated.
3. Closed structure prevents fluid leakage.

■Specifications

Model		AL-32T	AL-32T-N
Structure		Closed type	
Application		Air, water, oil, other non-dangerous fluid *	Cold and hot water
Working pressure		0.05-1.0 MPa	
Working temperature		5-120°C	5-100°C
Material	Spring case	Stainless steel	
	Valve	Stainless steel (SCS14A)	
	Valve seat	Stainless steel (SUS316)	
	Adjusting spring	Stainless steel	
	O-ring	Synthetic rubber (FKM)	
Connection		JIS10K loose flange	

* Please contact us when using for oil.
· Please refer to the chart in P.3-80 for set pressure range.

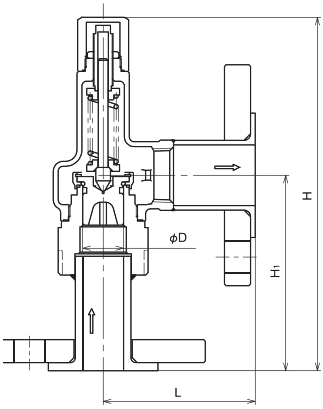

■Dimensions and Weights

Nominal size	Dimension (mm)				Flow area πDℓ (mm²)	Weight (kg)
	D	L	H_1	H		
15A	16	63	97	185	20.1	2.4
20A	21	87	101	187	34.6	2.8
25A	26	92	119	215	53.0	4.4
32A	33	99	135	255	93.3	5.2
40A	41	109	140	281	135.2	6.5
50A	51	114	162	332	208.2	11.3

* The outlet flange is 1 size larger than the nominal size.

Soft seat is used for the trim parts!

Soft seat (O-ring) is used for the trim parts, ensuring the reliable air tightness of the valve seat.

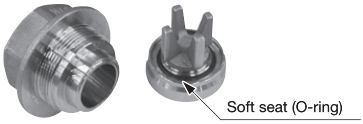

·AL-32 for steam (Saturated temperature) **<Pressure vessel structure standard>**

(kg/h)

Pressure MPa / Nominal size (mm)	0.05	0.1	0.2	0.3	0.4	0.5	0.6	0.7	0.8	0.9	1.0
15A	15	20	29	40	50	60	70	80	90	100	109
20A	27	35	51	69	87	104	121	138	155	172	189
25A	42	54	78	105	133	159	186	212	237	263	289
32A	70	91	132	178	224	268	313	356	400	443	487
40A	105	136	198	266	335	402	468	534	599	664	729
50A	163	211	306	411	518	621	723	824	924	1025	1126

·AL-32, 32T, 32TML, for air (20°C) **<Pressure vessel structure standard>**

(kg/h)

Pressure MPa / Nominal size (mm)	0.05	0.1	0.2	0.3	0.4	0.5	0.6	0.7	0.8	0.9	1.0
15A	25	33	48	65	81	98	114	131	147	164	181
20A	44	57	83	111	140	169	197	226	254	283	311
25A	67	87	127	171	215	258	302	346	390	433	477
32A	113	147	214	288	362	435	509	582	656	730	803
40A	169	221	321	431	542	652	762	872	982	1093	1203
50A	262	341	496	666	836	1006	1176	1346	1516	1687	1857

·AL-32, 32T, 32T-N, 32ML, 32TML-N for water (accumulation 25%) **<Yoshitake standard>**

(m^3/h)

Pressure MPa / Nominal size (mm)	0.05	0.1	0.2	0.3	0.4	0.5	0.6	0.7	0.8	0.9	1.0
15A	0.4	0.5	0.9	1.1	1.3	1.5	1.6	1.8	1.9	2.0	2.1
20A	0.6	0.9	1.6	2.0	2.3	2.6	2.8	3.1	3.3	3.5	3.7
25A	1.0	1.5	2.5	3.1	3.6	4.0	4.4	4.7	5.1	5.4	5.7
32A	1.8	2.6	4.5	5.5	6.3	7.1	7.8	8.4	9.0	9.5	10.0
40A	2.7	3.8	6.5	7.9	9.2	10.3	11.3	12.2	13.0	13.8	14.6
50A	4.1	5.9	10.0	12.3	14.2	15.9	17.4	18.8	20.1	21.3	22.4

* Please refer to the chart in P.3-12 for the calculation procedure for nominal size selection.